ID	Description	Date	By	Appr.
A				

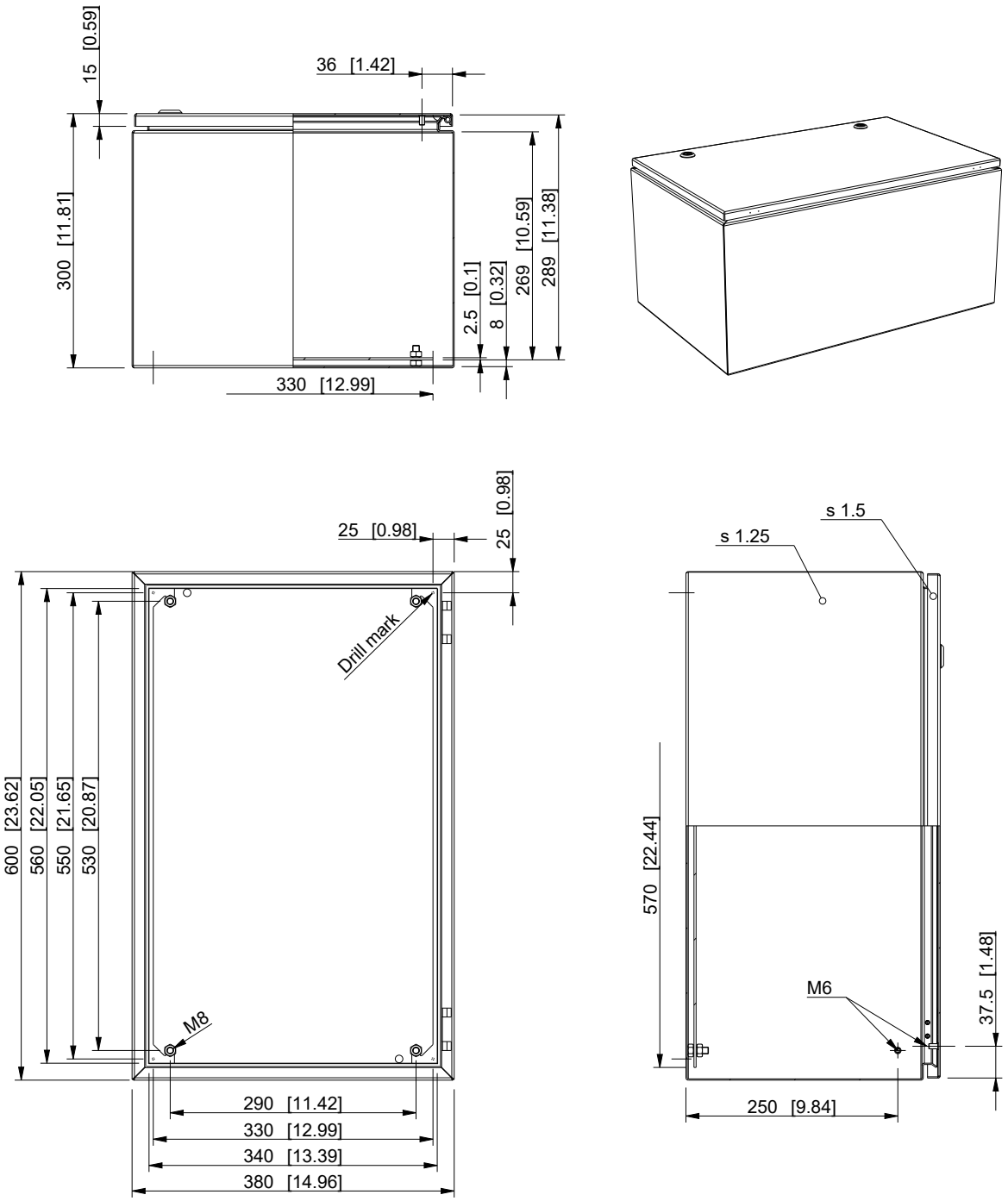

Dimensions in mm [inches]

Material: Stainless steel, AISI 304		Color: -	
Supplier: -	Tool No: -	Weight [kg]: 16.66	Volume: 0
CASEMET Casemet Oy		ESSP386030	Replaces:
			Replaced:
Scale	Date	15.12.17	Drw No: A
2:15	By	VLe	Ref: Cubo E
-	Checked		Code: ESSP386030
-	Ctrl		Sheet No:

model ESSP386030 PART

drawing ESSP DRAWING