ID	Description	Date	By	Appr.
A				

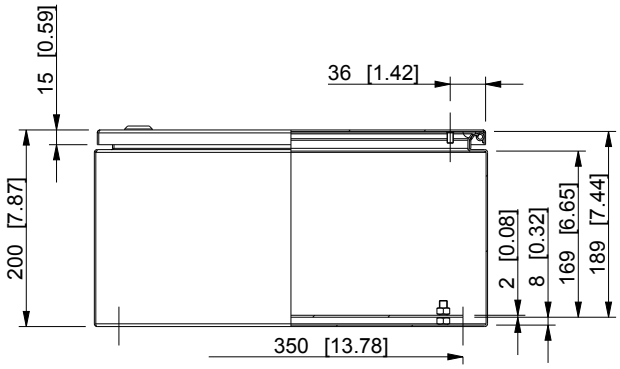

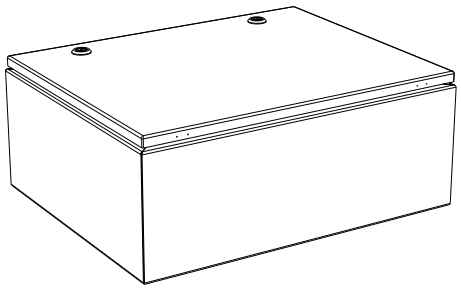

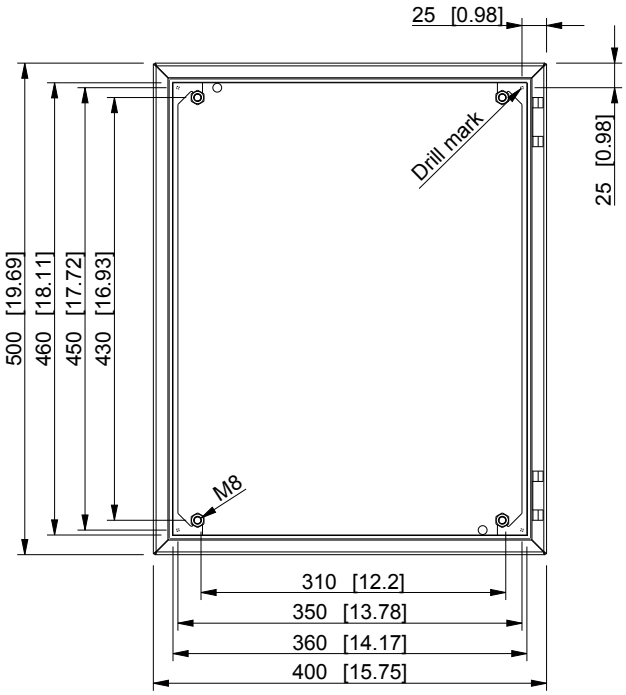

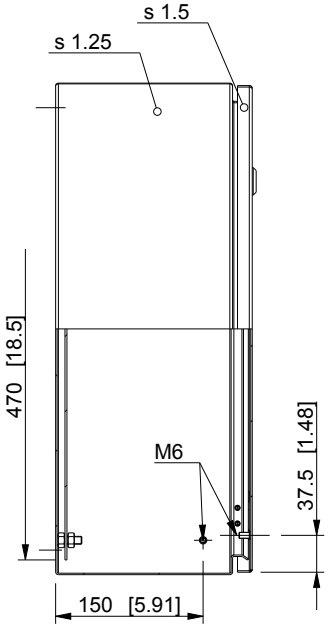

Dimensions in mm [inches]

Material: Stainless steel, AISI 304		Color: -	
Supplier: -	Tool No: -	Weight [kg]: 12.19	Volume: -

CASEMET Casemet Oy		ESSP405020	Replaces:
			Replaced:
Scale	Date	15.06.16	Drw No: A
2:15	By	VLe	Ref: Cubo E
-	Checked		Code: ESSP405020
-	Ctrl		Sheet No:

model ESSP405020 PART
drawing ESSP DRAWING