ID	Description	Date	By	Appr.
A				

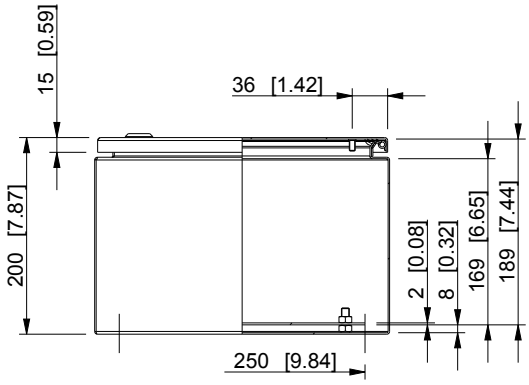

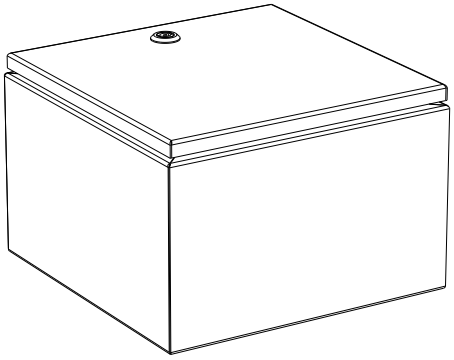

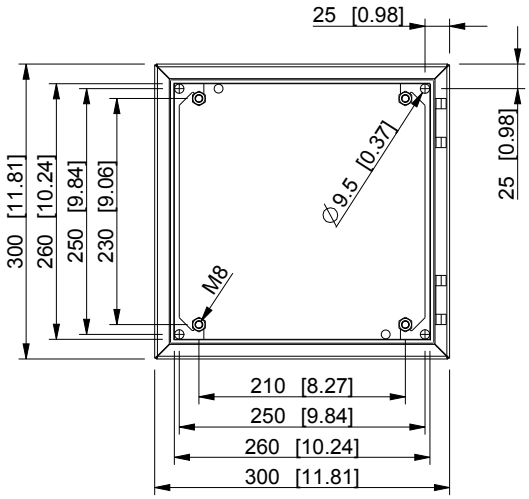

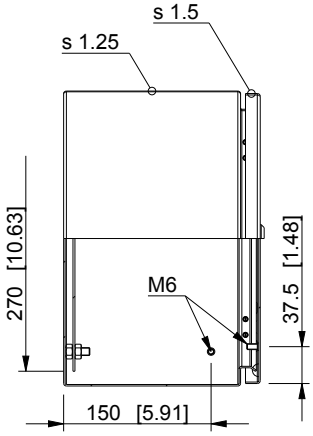

Dimensions in mm [inches]

Material: Mild steel, polyester painted		Color: RAL 7035	
Supplier: -	Tool No: -	Weight [kg]: 6.43	Volume: -

CASEMET

Casemet Oy

Scale	Date	07.07.16
2:15	By	PLe
-	Checked	
-	Ctrl	

EFEP303020A

Replaces:	
Replaced:	
Drw No:	A
Ref:	Cubo E
Code:	EFEP303020A
Sheet No:	

model EFEP303020A PART

drawing EFEP DRAWING